Husqvarna



IPL, RA10, RA10 S, 2007-10, 544 92 15-06

RA10
RA10 S

Reservdelar
Spare parts
Ersatzteile
Pieces de rechange
Piezas de repuesto
Ricambi
Peças sobresselente

544 92 15-06

HUSQVARNA CONSTRUCTION PRODUCTS

No.	Pos.	Description	No.	Pos.	Description
501 04 97-01	A	SHAFT			
502 44 66-01	A	PARALLEL KEY			
503 20 02-16	C	SCREW			
503 20 07-12	C	SCREW			
503 20 30-11	B	SCREW			
503 22 66-01	B	NUT			
503 23 01-04	A	WASHER STEEL			
503 25 21-01	AC	BALL BEARING			
505 27 06-09	A	GASKET			
506 07 08-01	C	SPACING SLEEVE			
506 22 66-11	A	RAIL FIXTURE			
506 22 66-12	A	RAIL FIXTURE			
506 22 67-03	A	RAIL ATTACHMENT			
506 22 67-04	A	RAIL ATTACHMENT			
506 22 68-01	A	SHAFT			
506 22 69-03	A	LOCKING HANDLE			
506 22 69-04	A	LOCKING HANDLE			
506 22 70-01	A	SPACER TUBE			
506 22 70-02	A	SPACER TUBE			
506 22 72-01	A	SHAFT			
506 22 75-01	C	SLEEVE			
506 22 76-04	A	LOCKING HANDLE			
506 22 77-02	A	DRAW SPRING			
506 22 78-01	A	NEEDLE BEARING			
506 23 63-01	A	FLAT BAR			
506 26 63-02	D	LINING			
506 26 66-01	B	BELT TENSIONER ASSY			
506 26 68-01	B	COMPRESSION SPRING			
506 27 92-03	B	BELT GUARD			
506 27 92-04	B	BELT GUARD			
506 28 84-01	C	SCREEN PATTERN FLANG			
506 34 05-24	D	WHEEL GUARD ASSY			
506 34 05-26	D	WHEEL GUARD ASSY			
506 34 46-02	D	HANDLE			
506 35 07-63	C	SHAFT			
506 37 27-38	D	BELT			
506 38 54-01	A	KNOB			
544 39 97-01	A	SPRING			
544 88 71-01	A	LABEL			
544 88 75-01	C	BEARING HOUSING			
544 88 75-03	C	BEARING HOUSING			
544 92 34-03	A	ARM BASE ASSY			
544 92 35-05	A	ARM TOP ASSY			
723 63 70-01	A	SCREW			
725 53 31-55	D	SCREW			
732 21 16-01	A	NUT			
732 25 22-01	A	NUT			
735 31 33-10	A	CIRCLIP			

A RA 10, RA 10S

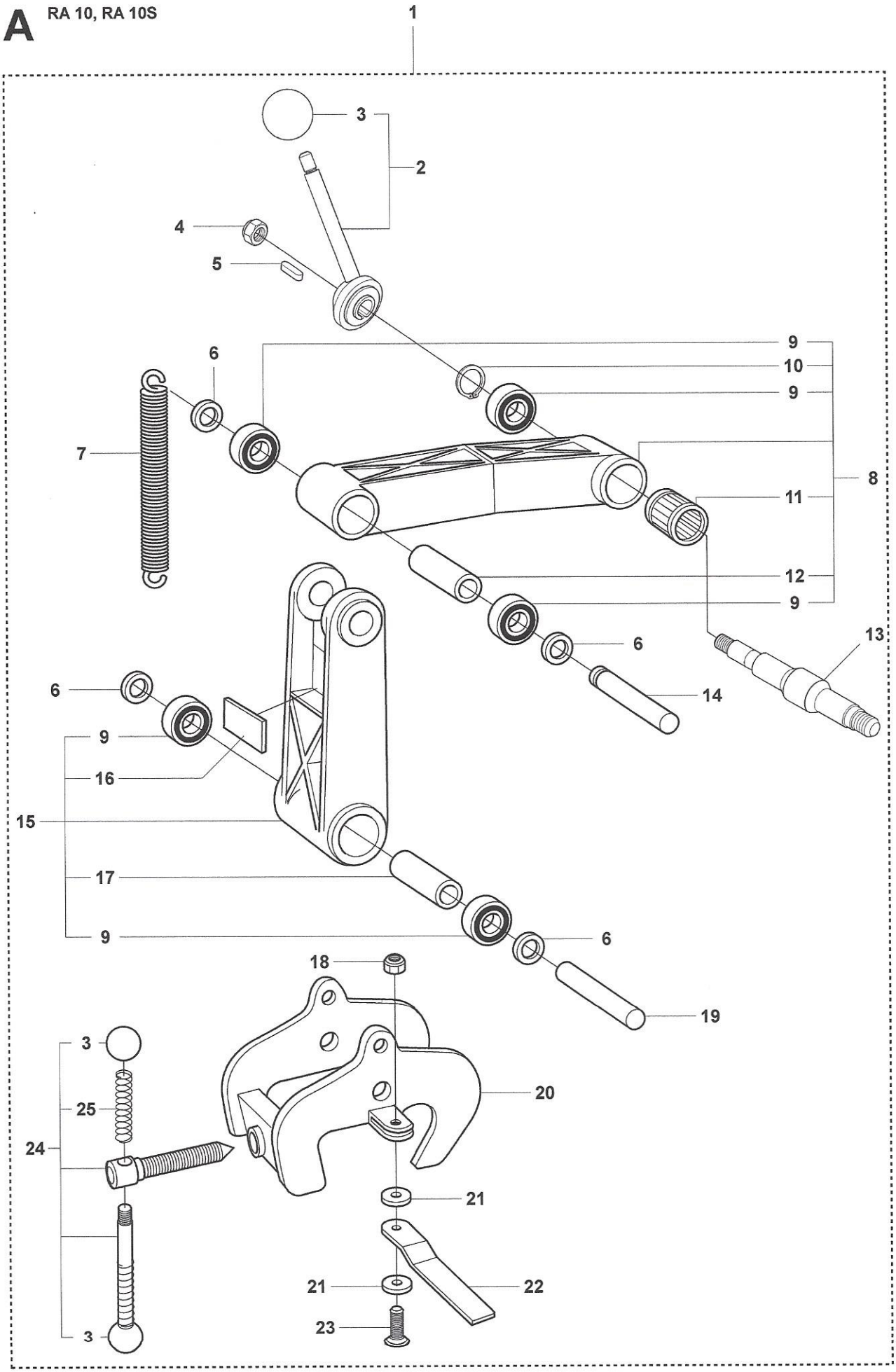
1
3
2
4
5
9
10
9
6
7
8
11
12
9
6
13
14
6
9
16
15
17
9
6
18
19
3
25
24
20
21
21
22
23
3

Page A
RA10, RA10 S, K1250 Rail

Pos.	Part No.	Description	Quantity	Notes	New Part
1	506 22 66-11	RAIL FIXTURE	1	RA10. Incl. 2 - 24	New Part
1	506 22 66-12	RAIL FIXTURE	1	RA10 S. Incl. 2 - 24	New Part
2	506 22 76-04	LOCKING HANDLE	1	Incl. 3	New Part
3	506 38 54-01	KNOB	3		
4	732 25 22-01	NUT	1		
5	502 44 66-01	PARALLEL KEY	1		
6	503 23 01-04	WASHER STEEL	4		
7	506 22 77-02	DRAW SPRING	1		
8	544 92 35-05	ARM TOP ASSY	1	Incl. 9 - 12	New Part
9	503 25 21-01	BALL BEARING	5		
10	735 31 33-10	CIRCLIP	1		
11	506 22 78-01	NEEDLE BEARING	1		
12	506 22 70-01	SPACER TUBE	1		
13	501 04 97-01	SHAFT	1		New Part
14	506 22 72-01	SHAFT	1		
15	544 92 34-03	ARM BASE ASSY	1	Incl. 9, 16, 17	New Part
16	544 88 71-01	LABEL	1		
17	506 22 70-02	SPACER TUBE	1		
18	732 21 16-01	NUT	1		
19	506 22 68-01	SHAFT	1		
20	506 22 67-03	RAIL ATTACHMENT	1	RA10	
20	506 22 67-04	RAIL ATTACHMENT	1	RA10 S	
21	505 27 06-09	GASKET	2		
22	506 23 63-01	FLAT BAR	1		
23	723 63 70-01	SCREW	1		
24	506 22 69-03	LOCKING HANDLE	1	RA10. Incl. 3, 25	
24	506 22 69-04	LOCKING HANDLE	1	RA10 S. Incl. 3, 25	
25	544 39 97-01	SPRING	2		

B RA 10, RA 10S

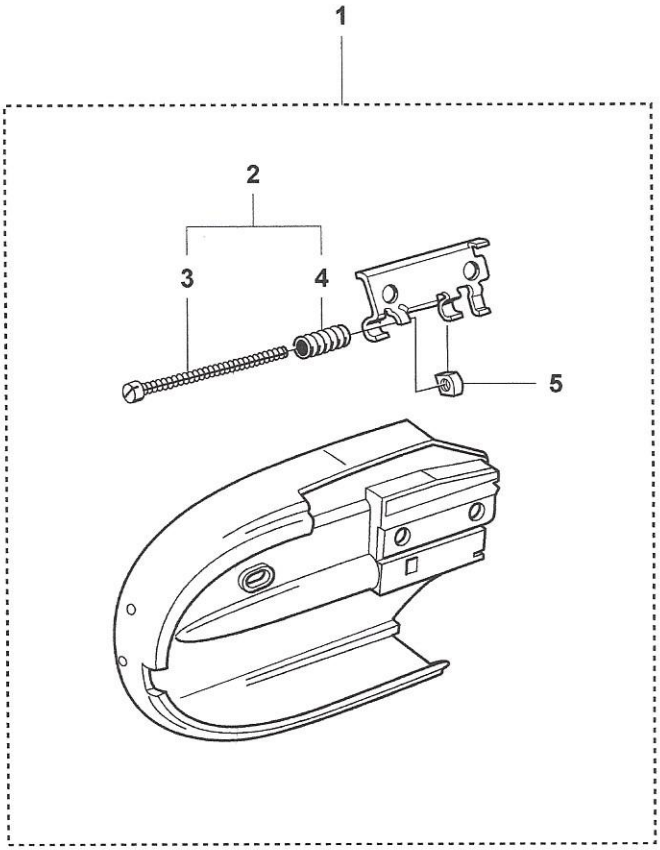

Page B
RA10, RA10 S, K1250 Rail

Pos.	Part No.	Description	Quantity	Notes	New Part
1	506 27 92-03	BELT GUARD	1	14". Incl. 2, 5	
1	506 27 92-04	BELT GUARD	1	16". Incl. 2, 5	
2	506 26 66-01	BELT TENSIONER ASSY	1	Incl. 3, 4	
3	503 20 30-11	SCREW	1		
4	506 26 68-01	COMPRESSION SPRING	1		
5	503 22 66-01	NUT	1		

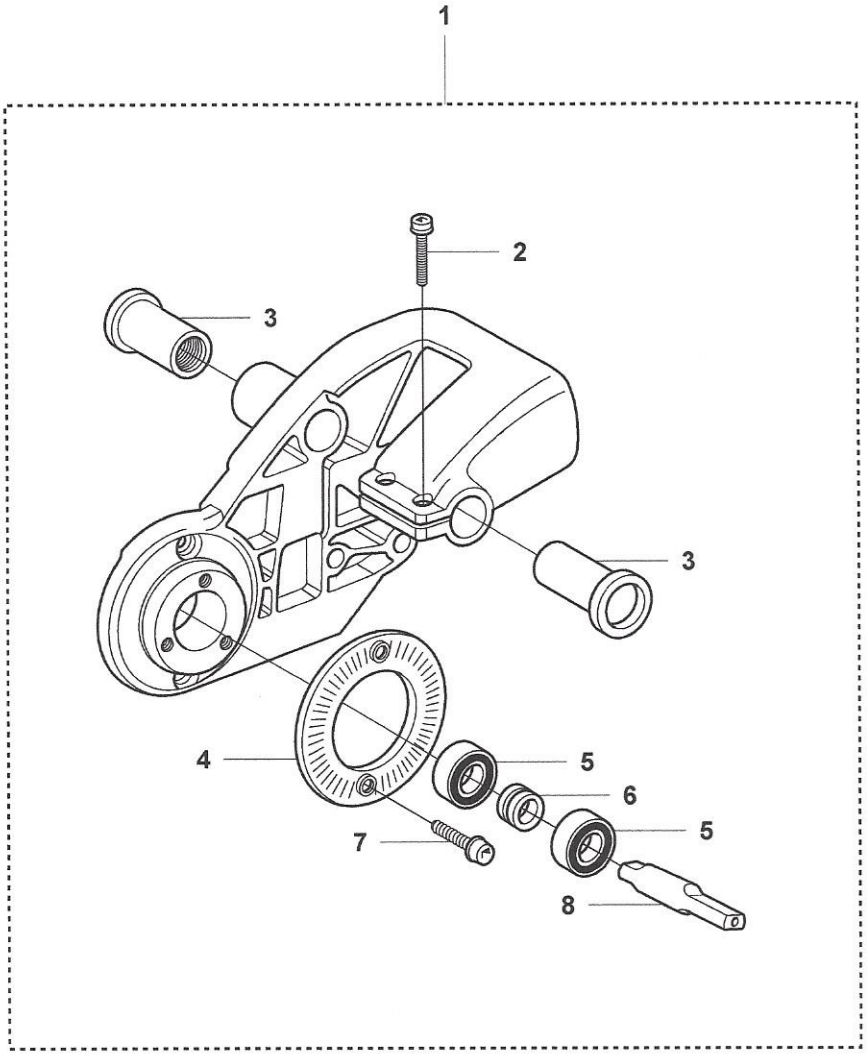
1
2
3
3
4
5
6
5
7
8

Page C
RA10, RA10 S, K1250 Rail

Pos.	Part No.	Description	Quantity	Notes	New Part
1	544 88 75-01	BEARING HOUSING	1	14". Incl. 2 - 8	
1	544 88 75-03	BEARING HOUSING	1	16". Incl. 2 - 8	
2	503 20 02-16	SCREW	2		
3	506 22 75-01	SLEEVE	2		
4	506 28 84-01	SCREEN PATTERN FLANG	1		
5	503 25 21-01	BALL BEARING	2		
6	506 07 08-01	SPACING SLEEVE	1		
7	503 20 07-12	SCREW	2		
8	506 35 07-63	SHAFT	1		

D RA 10, RA 10S

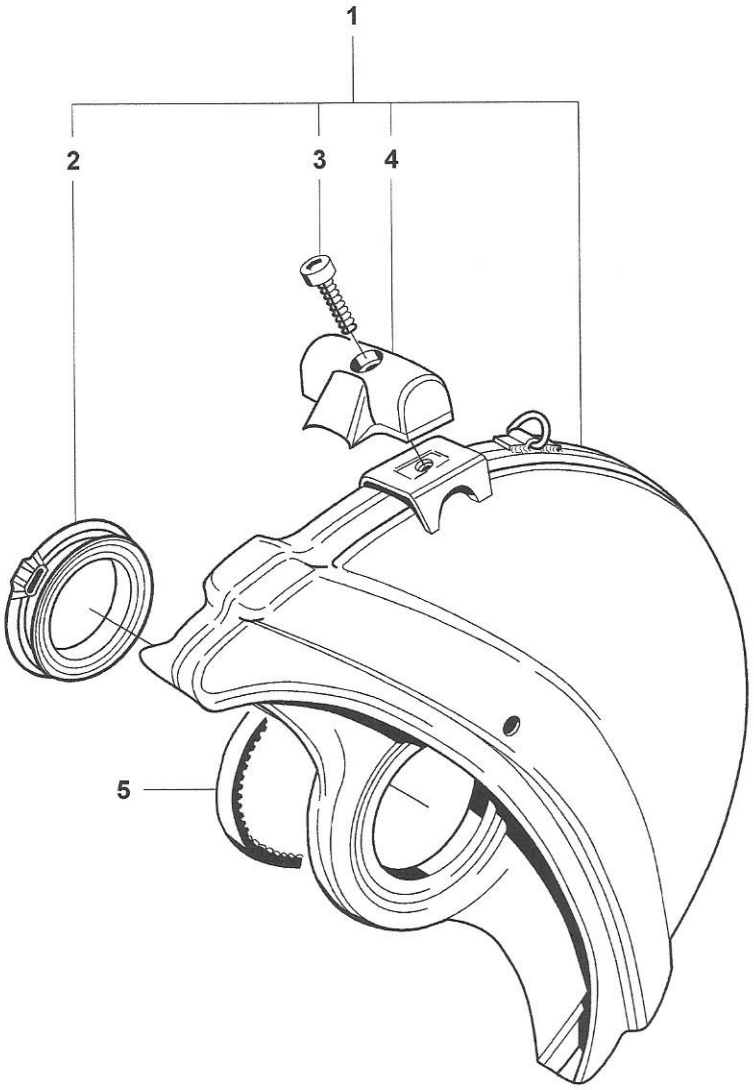

Page D
RA10, RA10 S, K1250 Rail

Pos.	Part No.	Description	Quantity	Notes	New Part
1	506 34 05-24	WHEEL GUARD ASSY	1	14". Incl. 2, 3, 4	
1	506 34 05-26	WHEEL GUARD ASSY	1	16". Incl. 2, 3, 4	
2	506 26 63-02	LINING	1		
3	725 53 31-55	SCREW	1		
4	506 34 46-02	HANDLE	1		
5	506 37 27-38	BELT	1		